08

www.goldenrules.co.kr

Golden Rules Co.,Ltd

Liquid
Electromagnetic Flow Meter

KC-8850 Series
MAGNETICS FLOWMETER

The nation's development item, 100% domestic goods,Patent **NO.** 10-1660226

08. ELECTROMAGNETIC FLOWMETER

8-2. Magnetic Flowmeter KC-8850 Series

Compact Type
KC-8851 Series

Remote Type
KC-8852-R Series

Features

- Measuring Range : 0.14 ~ 96,000.0 m3/h
- Enclosure : IP67 (standard), IP68 (option : immerse type)
- Accuracy : ±0.5% R.D (0.3~10 m/s), ±1.0% R.D (0.01~0.3 m/s)
- Housing & Flange Mat'l : Carbon or Stainless Steel (option)
- Control ouput : Forward & Reverse Flow, High & Low Aralm
- Control input : Zero adjustment, Initialization of integration, Integration stop
- Pulse output : Active or Passive, Pulse
- Diagnostic function : Malfunction record, Instantaneous flow output test, Control input and output test, Emulation test mode

Other features

Parameter Pretection
Indicator of Sensor Parameter
Span Adjustment & Zero Adjustment
Small Signal Cutting, Smoothing
Access to External Memorizer

Flow meter Size	10 ~ 2000 mm (3/8" ~ 80")
Flange spec'	0.6 ~ 1.6 MPa (Option: Ordering Code)
Liner mat'l	Hardrubber, PTFE, PFA
Electrode type	Standard type
Electrode mat'l	STS316L(STD), Hastelloy-C, Titanium, Tantalium
Ambient temp'&Humidity	-25 ~ 60℃ Remote type -25 ~ 70℃ / (5 ~ 95)%RH (Relative Humidity)
Fluid Temperature	Rubber -10 ~ +70℃ / FEP -10 ~ +160℃ / PTFE -10℃ ~ +180℃
Measuring Velocity	100 : 1 (Velocity 10 m/s bellow)
Converter Structure	Integral, Remote, immerse type
Input power	85~250 VAC, 24 VDC(Option), Battery(Option); Life 2 year
Communication	RS-485
Output signal	Analog 4-20mA DC, Pulse Output(DC 8~30V Open collector pulse)

The information contained herein is subject to change without notice.

Description

The KC-8850 series intelligent electromagnetic flowmeter measures the flow rate based on the principles of Faraday's law of KC-8850 Electromagnetic Flow Meter is a flange type electromagnetic flow meter ideal for conductive liquids. It comes in sizes from 10 ~ 2200mm flow tubes.
Electromagnetic Flow Meter is widely used for tap-water, waste water, food & bever-age pulp & paper and many other applications. Can be is a stand alone magmeter that could also be used with various configurations, such integral or remote and DC power requirment. RS-485 communication are available.

Measuring Principle

The Electromagnetic Flow Meter uses Faraday's Law of electromagnetic induction to measure the process flow. When an electrically conductive fluid flows in the pipe, an electrdes placed at right angles to the direction of the magnetic field. The electrode voltage E is directly Proportional to the average fluid velocity V.

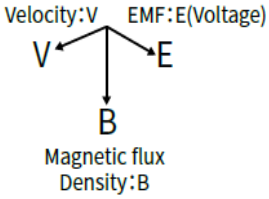

E = K x B x V x D
K: measuring instrument constant
B: magnetic flex density
D: diameter of measurement duct
V: Average fluid velocity across the duct

Performance Spec'

- Accuracy: ±0.5% R.D (10~600mm), ±1% R.D (700~2200mm)
- Repeatability: ± 0.15%, ± 0.25%
- Vibration frequency: 50/60Hz
- Storage of surrounding environment: ≤400A / m
- Liquid electrical conductivity: 5μs
- Electronic case: IP67(Integral type), IP68 (synthetic rubber liner material separation type)
- Alarm output: activated
- Flange material: carbon steel, stainless steel(Option)
- Measurement tube material: stainless steel
- Flange standard, any standard flange available according to buyer's requirements

Body Spec'

Electrode Mat'l	Non-corrosive performance
STS316L	For water, waste water, inorganic or organic acid, nitric acid, lower than 5% vitrol in room temperature, boiling phosphoric acid, gormic acid, aqueous alkali, and sulfurous acid, acetic acid in a certain amount of pressure
Hastelloy	seawater and brine
Titanium	seawater, various chloride and hypochlorine, gasified acid (including fuming nitric acid) and alkali
Tantalium	chemical liquid, including boiling muriatic acid, and 175 °C-down vitrol

Lining Material Selection

Lining Material	Main Performance	Temp' Range
PTFE	1) Resistant muriatic acid, vitrol, nitric acid, aqua regia concentrated alkali, and organic solvent II)good wearability and bad cohesion. (I) -40 ~ + 150 °C (I) Quite good resistance , wearability, and breaking tenacity	- 10° C ~ +160° C
Hardrubber	(II) Anticorrosive to normal week acid and alkali (I) ≤70 °C (II) Water and sewage	≤ + 70° C

Flow Range and Spec' Diameter Selection Table

Size (mm)	25Flow Range (m³/h)		Size (mm)	Flow Range (m³/h)	
	Min. Range	Max. Range		Min. Range	Max. Range
	0.3 m/s	10 m/s		0.3 m/s	10 m/s
10	0.14	2.8	400	160	3200
15	0.3	6	450	200	4000
20	0.5	10	500	250	5000
25	0.8	16	550	300	6000
32	1.4	28	600	350	7000
40	2	40	700	500	10000
50	3	60	800	600	12000
65	5	100	900	800	16000
80	7	140	1000	1000	19600
100	10	200	1100	1200	24000
125	15	300	1200	1400	28000
150	25	500	1400	2000	40000
200	45	900	1600	2500	50000
250	70	1400	1800	3200	64000
300	100	2000	2000	4000	80000
350	120	2400	2200	4800	96000

도면 치수 사양 I

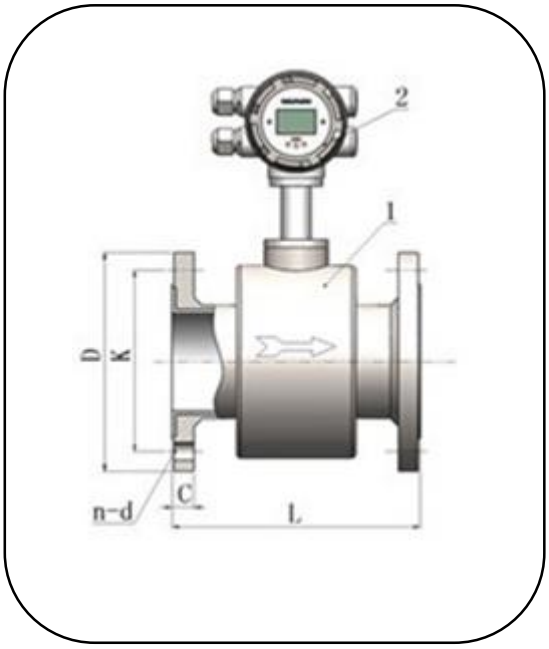

Integral type KC-8851

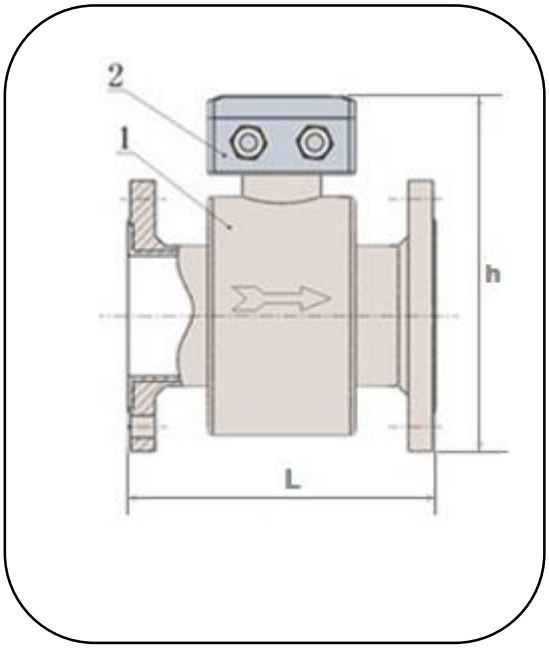

Converter Remote type KC-8852

도면 치수 사양 II

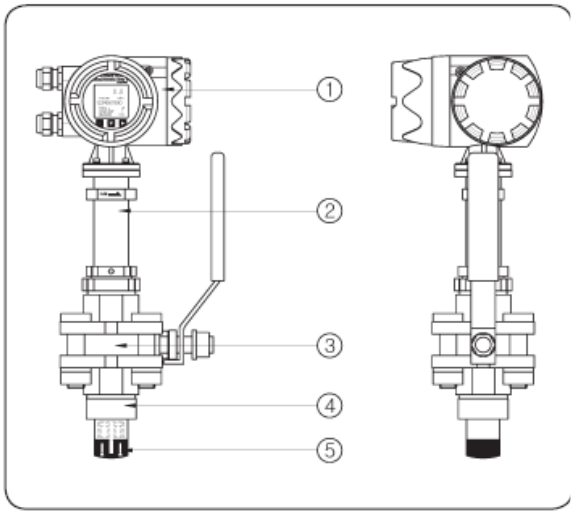

Integral type KC-8853

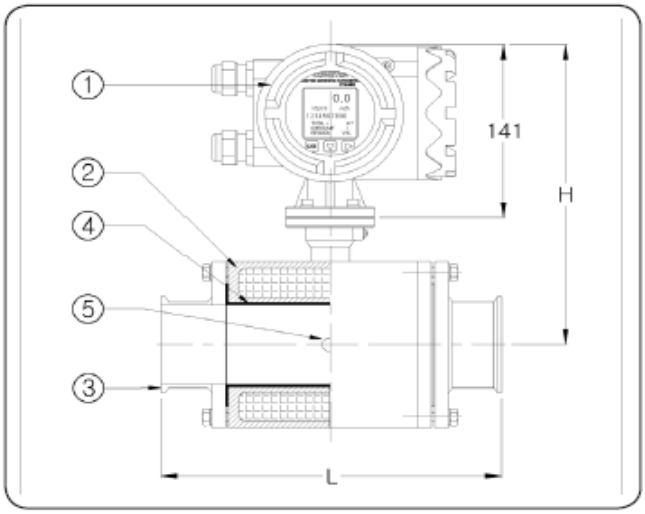

Converter Remote type KC-8851-S

Drawing Dimension Chart III

Pipe Size (mm)	Pressure (Mpa)	Outward Dimension (mm)			Dimension (mm)					Weight (kg)
DN	PN	L	H1	H2	D	K	C	n	d	
10	4.0	160	300	191	95	65	14	4	14	6
15	4.0	160	300	191	95	65	14	4	14	6.5
20	4.0	200	312	197	115	85	14	4	16	9
25	4.0	200	312	197	115	85	26	4	16	10
32	4.0	200	334	219	140	100	18	4	18	11
40	4.0	200	339	224	150	110	18	4	18	13
50	4.0	200	347	232	165	125	18	4	20	14
65	1.6	200	365	250	185	145	18	4	20	16
80	1.6	250	382	267	200	160	18	8	20	18
100	1.6	250	405	290	220	180	18	8	22	22
125	1.6	250	432	317	250	210		8	18	29
150	1.6	300	463	348	285	240	22	8	24	35
200	1.0	350	520	405	340	295	22	8	24	48
250	1.0	400	580	445	395	350	22	12	26	68
300	1.0	400	632	517	445	400	22	12	26	77
350	1.0	400	692	577	505	460	22	16	26	115
400	1.0	450	742	627	565	515	26	16	26	165
450	1.0	450	788	683	615	565	26	20	28	175
500	1.0	450	860	745	670	620	26	20	28	187
600	0.6	600	950	895	780	725	30	20	28	303
700	0.6	700	1046	990	895	840	30	24	30	470
800	0.6	800	1150	1095	1010	950	30	24	32	500
900	0.6	900	1250	1195	1110	1050	34	28	34	700
1000	0.6	1000	1386	1260	1230	1100	36	28	34	921
1200	0.6	1200	1480	1365	1405	1340	33	32	28	1100
1400	0.6	1400	1680	1565	1630	1560	34	28	32	1285
1600	0.6	1600	1820	1705	1830	1760	36	36	34	1675
1800	0.6	1800	1970	1855	2045	1970	36	40	36	2050
2000	0.6	2000	2135	2020	2265	2180	39	44	38	2670
2200	0.6	2200	2345	2230	2475	2390	42	48	52	3250

Drawing Dimension Chart IV

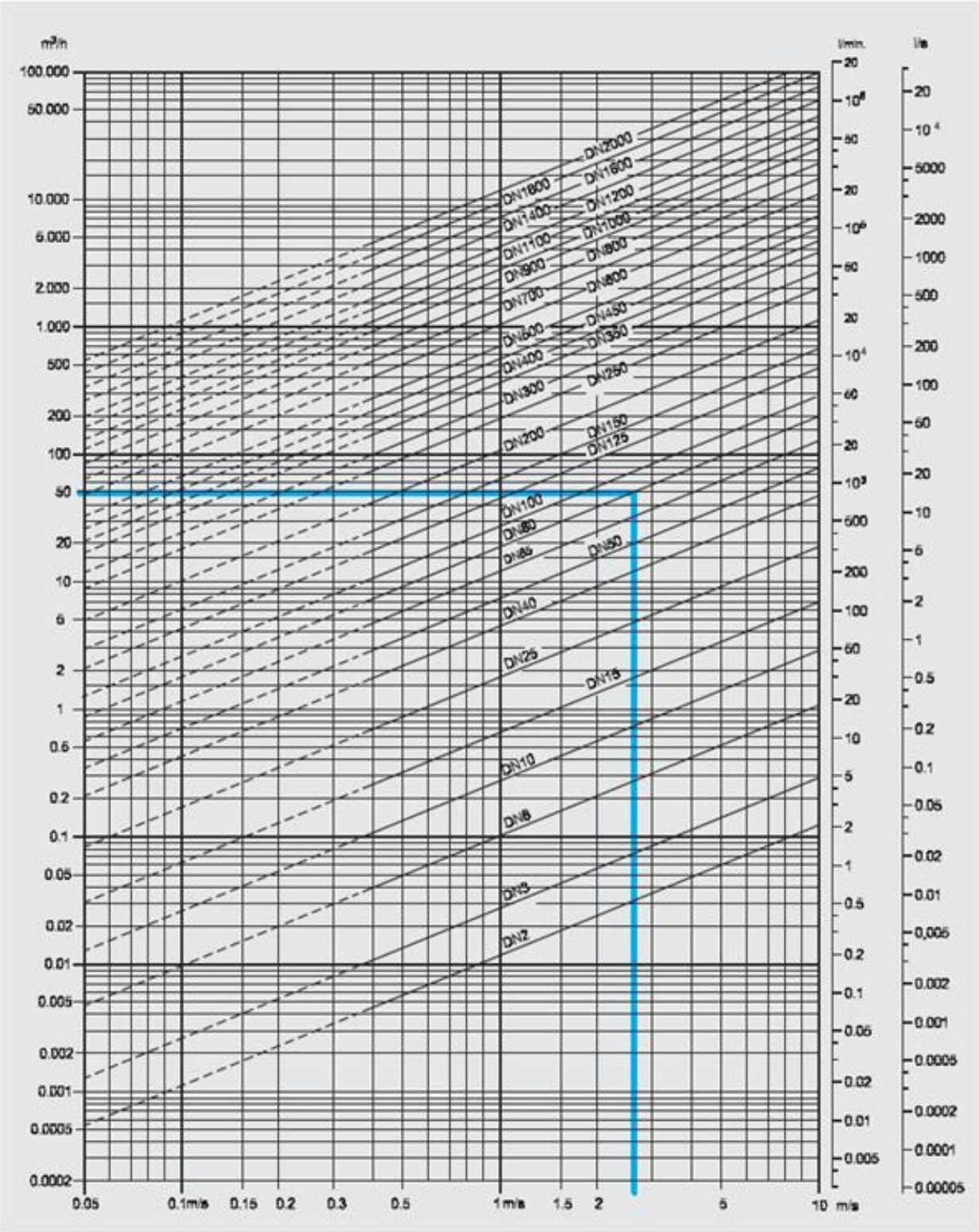

Flowmeter Installation Method II

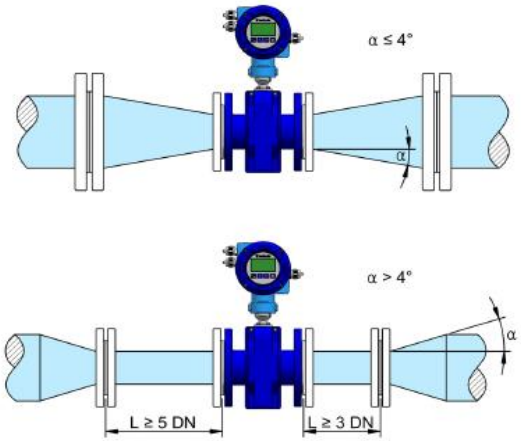

Shaft pipe & expansion pipe installation method

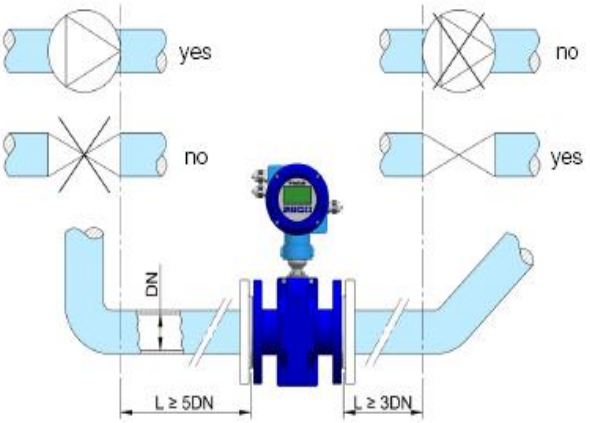

Curved pipe downward horizontal piping installation method

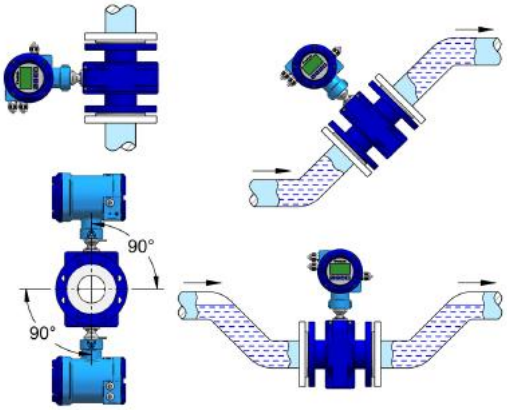

Flow rate installation method by pipe type

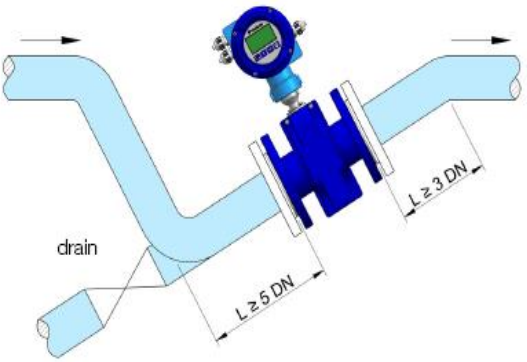

Curved pipe downward slope upward piping installation method

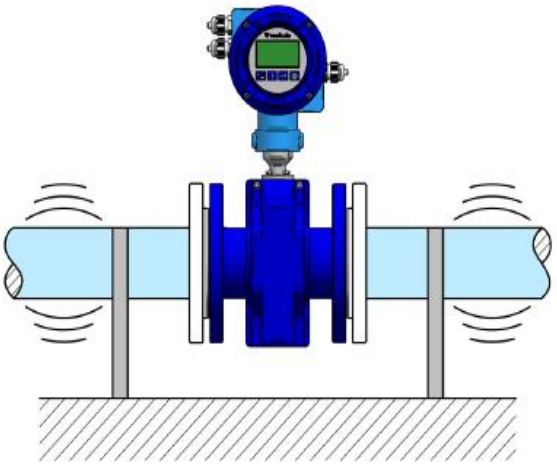

Horizontal pipe vibration damping installation method

Order Code KC-8850 Series (Magnetic Flowmeter)

	Type		Conn' mode		Conn' spec'		Power		Output		Display		Direction		E-Mat'l		L-Mat'l		Flang		Option
KC-88	5	–		–		–	P	–	V	–		–		–		–		–		–	
	1		2		3 4 5		6		7		8		9		10		11		12		13

structure type	Code 1
Integral(IP67)	1
Remote(IP68)	2
Insertion(High Pressure:4.0MPa)	3
SUS304/316L(High Pressure:4.0MPa)	4
Agency approved, customer specified	W

Connection Mode	Code 2
DIN Flange	D
ANSI Flange	A
JIS Flange	J
Clamp connection	C
Sanitary connection	S
Agency approved, customer specified	W

접속구 사양	Code 3,4,5		
Size	DIN	150 lb	JIS 10k
3/8" (DN10)	D1	F1	J1
1/2" (DN15)	D2	F2	J2
3/4" (DN20)	D3	F3	J3
1" (DN25)	D4	F4	J4
1-1/4" (DN32)	D5	F5	J5
1-1/2" (DN40)	D6	F6	J6
2" (DN50)	D7	F7	J7
2-1/2" (DN65)	D8	F8	J8
3" (DN80)	D9	F9	J9
4" (DN100)	D11	F11	J11
5" (DN125)	D12	F12	J12
6" (DN150)	D13	F13	J13
8" (DN200)	D15	F15	J15
12" (DN250)	D16	F16	J16
Agency approved, customer specified			W

Input Power	Code 6
DC 24 V ±10%(Option)	2
85~250 VAC	3

Output Signal	Code 7
4~20 mA DC & Pulse	1
RS-485 & 4~20 mA DC & Pulse	2
Agency approved, customer specified	W

Display	Code 8
No Readout	NR
Digital Display (Flow & Total)	DD
Agency approved, customer specified	W

Direction	Code 9
Horizontal -> Forward & Vertical up	1
Horizontal -> Reverse & Vertical down	2
Agency approved, customer specified	W

Electrode Material	Code 10
SUS 316L	1
Hastelloy C	2
Titanium	3
Tantalium	4
Agency approved, customer specified	W

Liner Material	Code 11
Hard Rubber	1
PTFE	2
FFA	3
FEP	4
Agency approved, customer specified	W

Flange Mode	Code 12
0.6 Mpa:max pressure(Integral type)	1
1.6 Mpa:max. pressure(Remote type)	2
4.0 Mpa:max pressure(Insertion&SUS)	3
Others	4
Agency approved, customer specified	W

Option Spec'	Code 13
Agency approved, customer specified	W

Golden Rules

• GOLDEN RULES

www.goldenrules.co.kr

Liquid
Magnetic Flowmeter
Specialty Manufacture

Distributor

Certified in accordance with

KC Q ISO 9001 : 2015

KC Q ISO 14001 : 2015

(주)골든룰